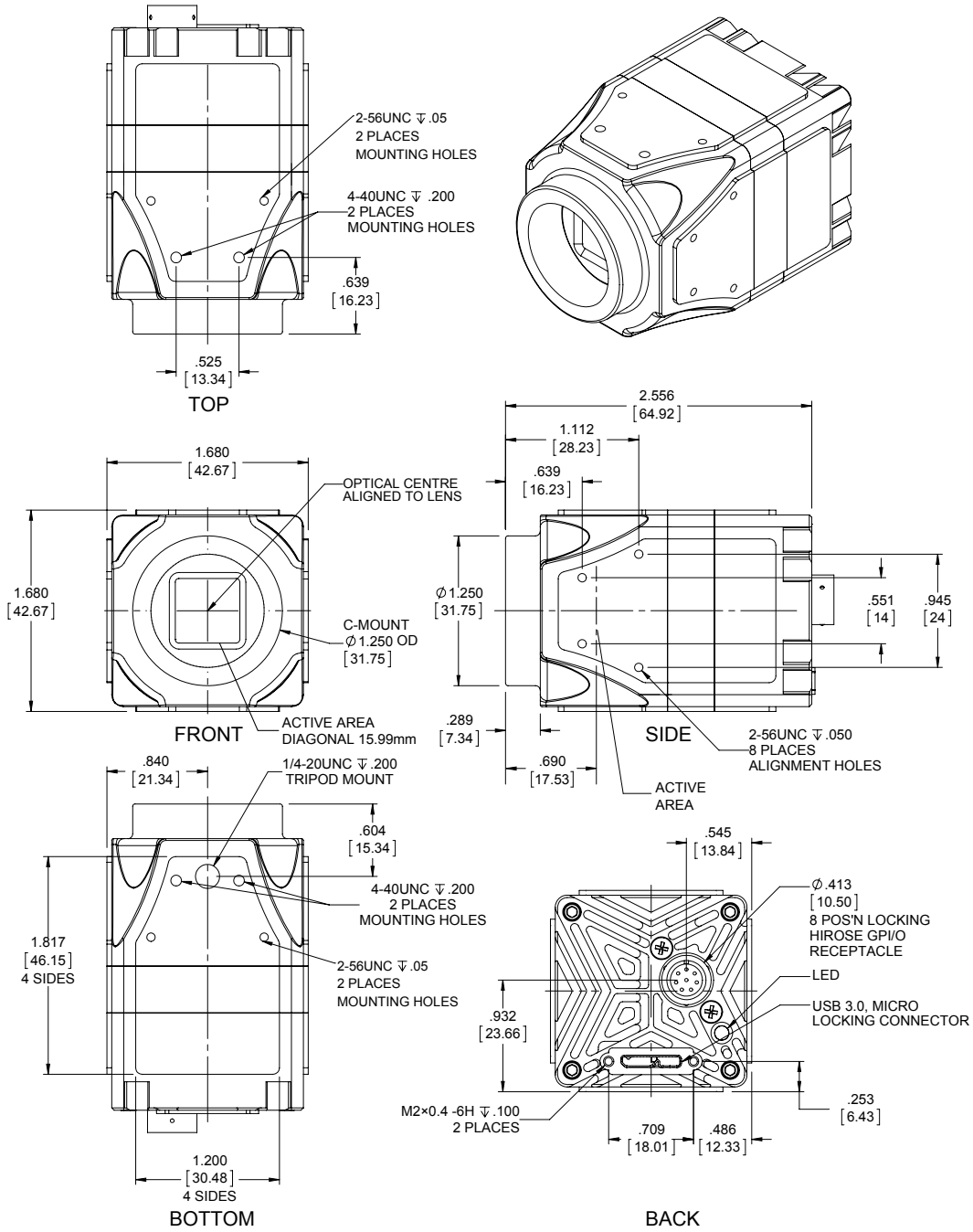

ALL DIMENSIONS DISPLAYED AS INCHES [MM]

Ophir®