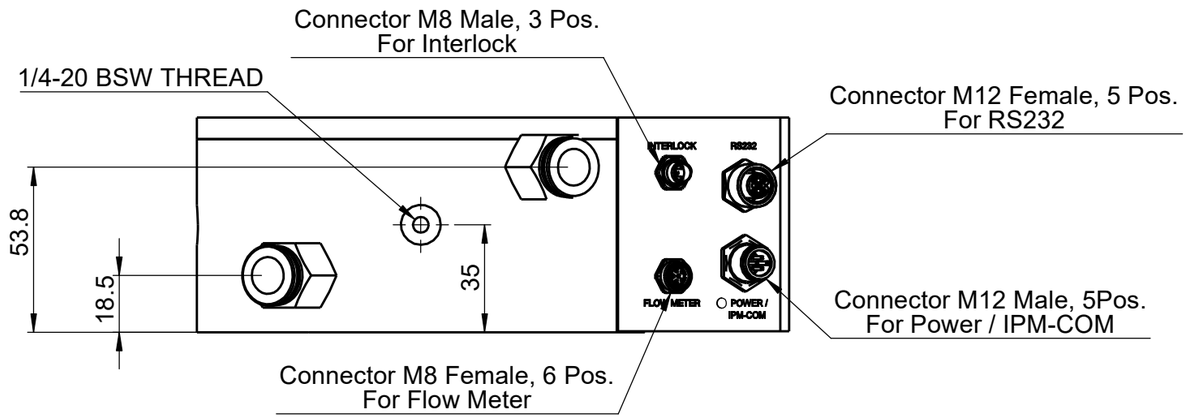
Connector M8 Male, 3 Pos.
For Interlock
1/4-20 BSW THREAD
Connector M12 Female, 5 Pos.
For RS232
53.8
18.5
35
INTERLOCK
RS232
FLOW METER
POWER / IPM-COM
Connector M12 Male, 5Pos.
For Power / IPM-COM
Connector M8 Female, 6 Pos.
For Flow Meter

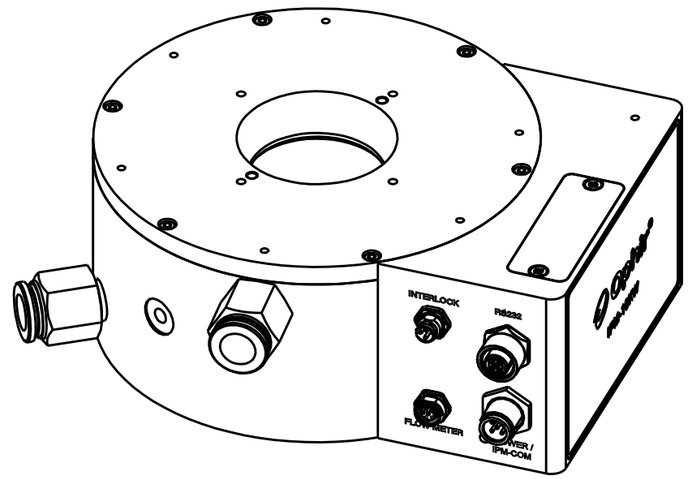
INTERLOCK
RS232
FLOW METER
POWER / IPM-COM

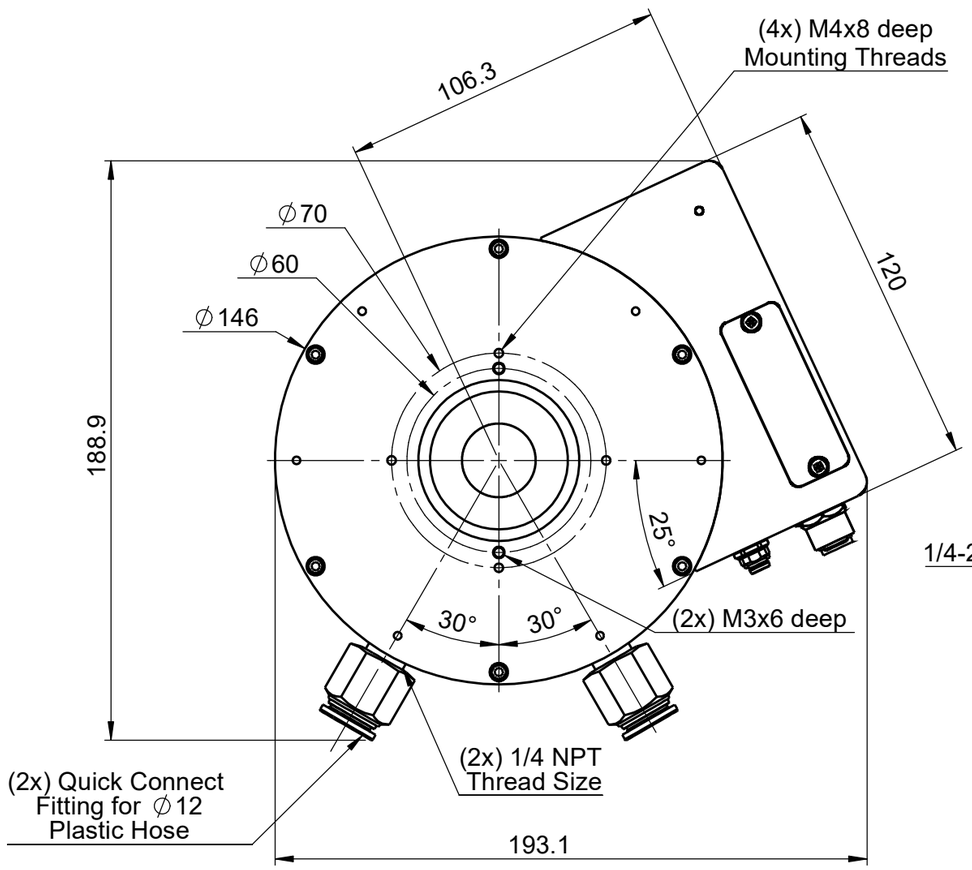
(4x) M4x8 deep
Mounting Threads
106.3
120
∅70
∅60
∅146
188.9
25°
30°
30°
(2x) M3x6 deep
(2x) 1/4 NPT
Thread Size
(2x) Quick Connect
Fitting for ∅12
Plastic Hose
193.1

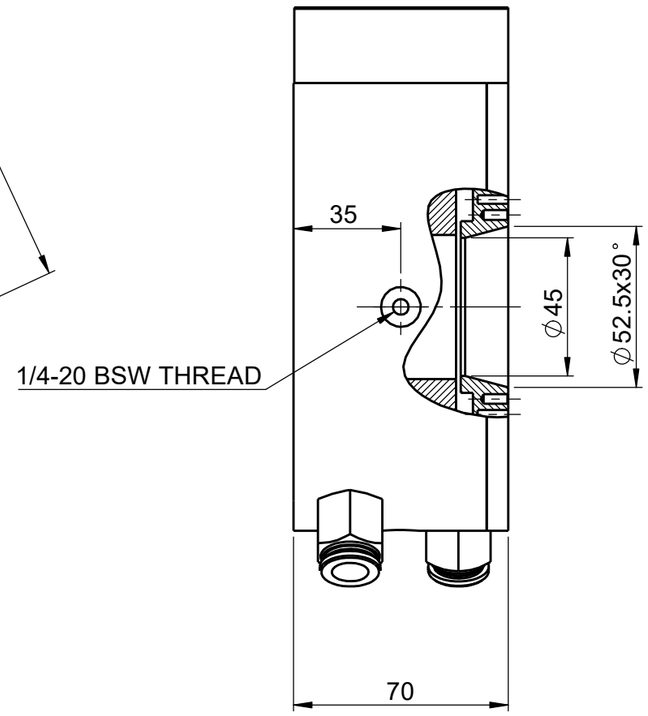
35
1/4-20 BSW THREAD
∅45
∅52.5x30°
70

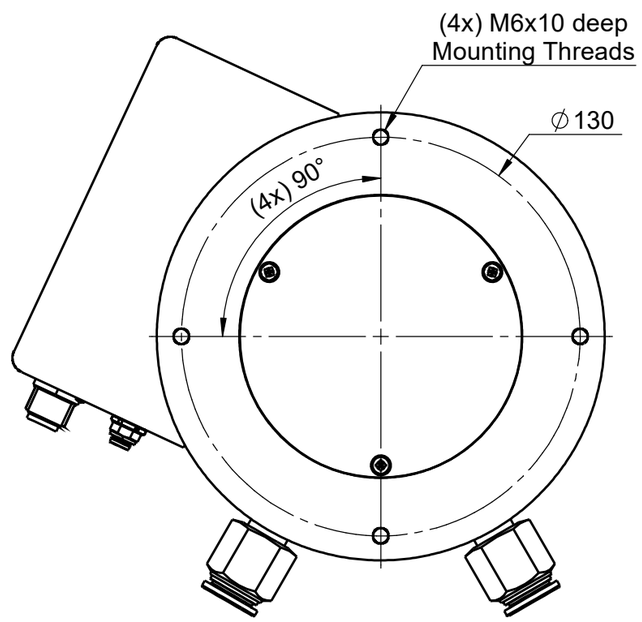
(4x) M6x10 deep
Mounting Threads
∅130
(4x) 90°