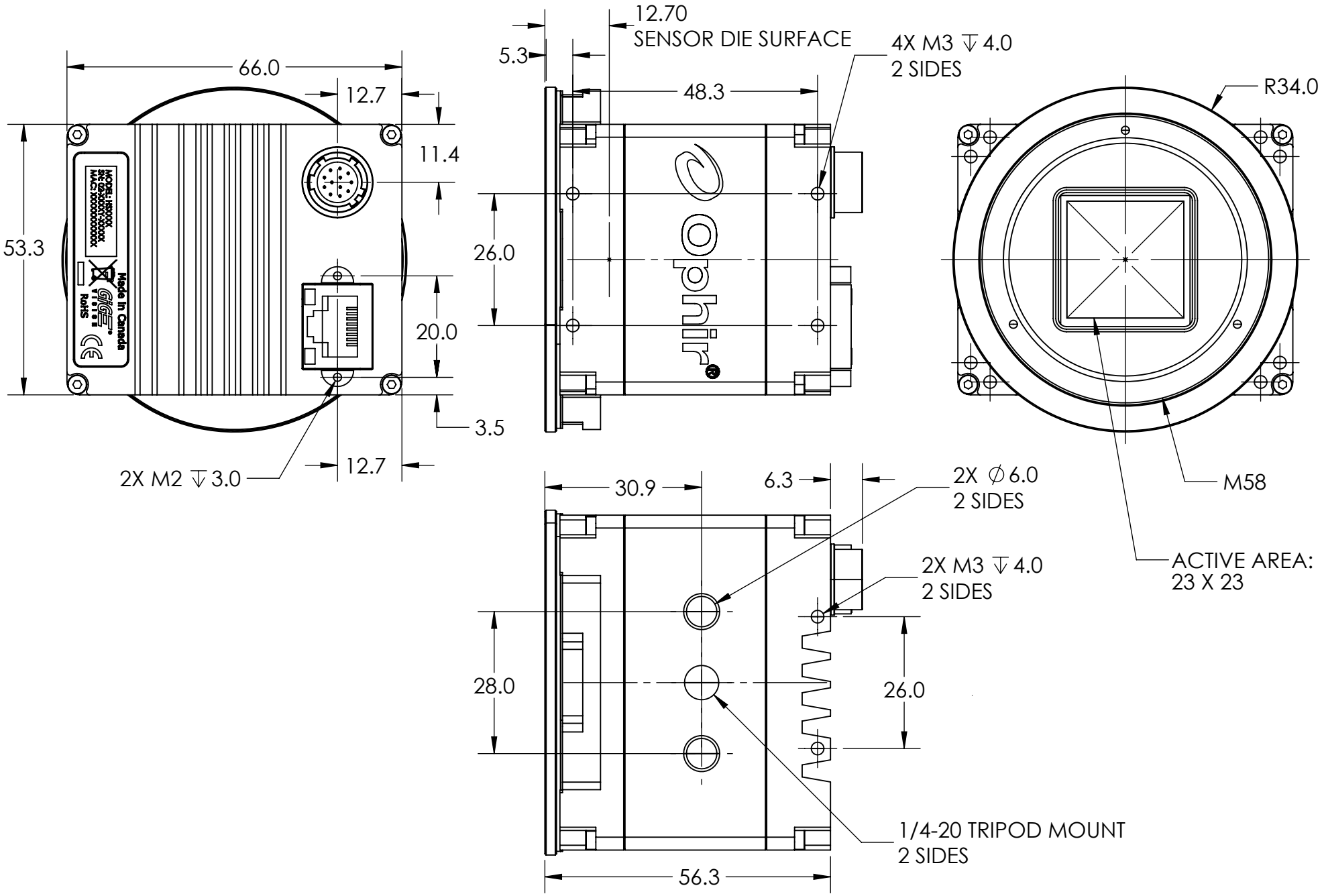
66.0
12.7
11.4
53.3
20.0
3.5
12.7
2X M2 ↧ 3.0
Made in Canada
RoHS
5.3
12.70
SENSOR DIE SURFACE
48.3
26.0
4X M3 ↧ 4.0
2 SIDES
R34.0
M58
ACTIVE AREA:
23 X 23
30.9
6.3
2X ∅ 6.0
2 SIDES
2X M3 ↧ 4.0
2 SIDES
28.0
26.0
1/4-20 TRIPOD MOUNT
2 SIDES
56.3